**Approved by Principal Investigator_____Date:_____**

**Approved by Super User: _____Date:_____**

**Standard Operating Procedure**
**BNC**
**Electrospin System**
**Version 2017 Oct 21**

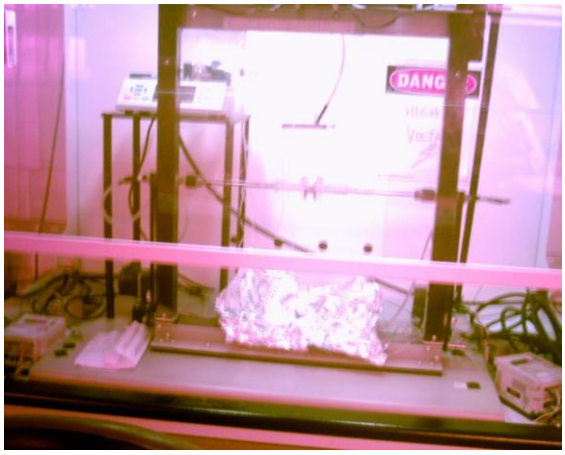

## I. Purpose

This Standard Operating Procedure (SOP) outlines requirements to be considered by an authorized user of the Electrospin System as well as describes the normal operation of the electrospinner and any hazards that may be encountered during normal operation. Finally, the SOP explains how to minimize any hazards and how to respond in an emergency situation.

## II. Overview

Electrospinning is a process in which polymer solution is electrically charged at the tip of a needle to create a nanoscale polymer fiber. This charged fiber whips erratically between the needle and a grounded or negatively charged collector. The process creates a mesh of unwoven polymer fibers on the collector.

## III. Personnel

A. Authorized Personnel: The Electrospin System may be operated only by authorized personnel who are fully cognizant of all safety issues involved in the operation of such a device. These personnel are to ensure that the Electrospin System is only operated in the manner laid out in this document. To become an authorized user, one must:

1. Complete Environment, Health & Safety (EH&S) Lab Safety class.
2. Take the baseline BNC Safety Orientation class
3. Read and fully understand the SOP
4. Receive training on the Electrospin System by an authorized user.
5. Sign the authorized user sheet to affirm that the above steps have been

completed.

B. Unauthorized personnel: No unauthorized personnel may enter the BNC clean room facility unless accompanied by an authorized user. All visitors must be briefed on proper safety protocol and must wear appropriate protective eyewear located on the premises.

**IV. Hazards and Control**

A. Electrical Hazards: electrical shock or electrocution could result from direct contact with the current of the high voltage. Such High voltage electrode and conductors are located within the enclosed exhaust hood of the electrospin system. In addition, the external power supply unit has connections behind the power supply chassis. Do not disconnect the external lines. Use normal precautions with external house (110VAC) connections behind the Electrospin system chassis. Ensure all ground connections are properly attached.

The electrospinning process utilizes a high voltage power supply or supplies to electrically charge particular components of the machine. The voltages used are typically in the range of 2 to 15KV, but could reach as high as 30KV depending on the required operating conditions. While the high voltages are applied under very low current so that the risk of serious injury is extremely low, touching the charged components will still result in a shock that may be moderately painful and should therefore be avoided. The following safety precautions must be followed to prevent electric shock:

a. NEVER touch the metallic needle holder when it is electrically charged (energized).
    i. Before turning on the power supply, set up all components and lower the hood sash, thus creating a physical barrier between the operator and the charged needle/mandrel. If the hood sash cannot be closed completely (due to air flow requirements and/or sash limitations), place an extra piece(s) of plastic between the operator and energized equipment whenever possible. Ensure that a physical barrier remains in place while the system is energized, thereby preventing accidental contact with the charged components.
    ii. After running the machine, ensure that the power supply is turned off (the power switch is not illuminated and the meter reads 0KV) before raising the shield and disassembling the components.
    iii. Make adjustments to the system only when the power supply is OFF.
b. If using more than one power supply, the above rules apply to each one.
c. If the collector is also energized, the same rules apply (do not touch the collector when energized).

B. Chemical: The polymer solutions are made with toxic solvents such as chloroform and hexafluoroisopropanol (HFIP), both of which require protection from skin and inhalation exposure. These chemicals are extremely dangerous unless the following precautions are applied:

1. Use only Nitrile gloves when working with these chemicals (Do not use standard latex gloves as they will not protect you, the solvent will penetrate them.
2. These chemicals are highly volatile and must only be used within a properly operating fume hood (Do not open these chemicals outside the hood). This fume hood should have proper chemical filtration system for sequestering all potentially harmful particles.
3. Before working with HFIP (or other volatile solvent), all users of the electrospinning equipment must be familiar with the document "Standard Operating Procedures for Use of HFIP." See Appendix C of this document. The document contains additional supplemental information necessary for working with HFIP in a ductless and/or exhausted fume hood. In the event of exposure to solvents through spillage or inappropriate use of the facility the first aid procedure described in the Risk assessment/Material Safety Data Sheet must be followed. For all but minor spillage the assistance of a First Aiders must report incidence to the lab safety officer.
4. Note: MSDS for this chemical is available if additional information is needed.

**V. Normal Operation**

A. Inspect all electrical connections for damage and connectivity.
B. Check that the servo controller with motors, syringe pumps, and hood are operational before electrospinning.
C. Complete the "check-in" log.
D. All syringes must be preloaded with the solutions in an appropriate chemical handling area and transported to the electrospin spin in a sealed container.
E. All materials including fibers, syringes, and waste must be removed from the electrospinner after use.
**F. <u>General operational directions:</u>**
   **a.** Note that this is a generalized procedure only. Specific settings depend on the polymer solutions used and the desired nanofibrous scaffold configuration.
   **b.** Load polymer solution into syringe.
   **c.** Use plastic tubing and luer lock connectors to attach needle to syringe.
   **d.** Load syringe into syringe pump (adjust pumps settings as desired. There are user manual excerpts for the syringe pump in the Appendix.
   **e.** Insert needle into metallic needle holder.
   **f.** Assemble collector (rotating mandrel).
   **g.** Adjust height and distance or stage/needle to collector as desired.
   **h.** Start mandrel rotation if desired. There are user manual excerpts for the motor driver in the Appendix.
   **i.** Start syringe pump flow.
   **j.** Lower hood sash to create a protective barrier between you and the energized components of the electrospinner, as well as the hazardous HFIP fumes. Note that the sash should remain closed whenever the polymer is being electrospun and/or whenever access to the working area in the hood is not immediately required. The

sash encloses the working area within the hood to prevent HFIP fumes from escaping in the event of a power outage or other hood failure.

**k.** When the polymer solution reaches the needle tip, turn on the required high voltage power supplies and adjust to desired voltage. There are power supply specifications in the Appendix.

**l.** Run or desired amount of time.

**m.** When electrospinning is complete, turn off the power supplies before opening the hood and disassembling the components as noted in the safety section above.

**n.** REMINDER: Cleanup and store away all chemicals properly.

## VI. Emergency Procedures

1. Electrospin accidents: Notify lab management and PI immediately.
2. Power outage: If possible, do the following:
   a. Shutdown High Voltage Power Supplies.
   b. Shutdown Syringe Pumps.

**Authorized Users**

I have read and understood the Standard Operating Procedures for Electrospin System.

| Name (print) | Signature | Date | PI Initial |
|---|---|---|---|
| | | | |
| | | | |
| | | | |
| | | | |
| | | | |
| | | | |
| | | | |
| | | | |
| | | | |
| | | | |
| | | | |
| | | | |
| | | | |

**Appendix A** – In case of medical emergencies, consult lab safety protocol or lab safety plan.

In the event of a Electrospin accident, follow the procedure below:

Ensure that the Electrospin is shut off per VI) Emergency Procedures.

1. Provide for the safety of the personnel (first aid, evacuation, etc.) as needed.

2. Obtain medical assistance for anyone who may be injured.

| | |
|---|---|
| UC Optometry Clinic (Normal Hours) | 642-2020 |
| UC Optometry Clinic (24 Hour Emergencies) | 642-0992 |
| University Health Services (Emergency) | 642-3188 |
| Ambulance (urgent medical care) | 9-911 |

3. If there is a fire, pull the alarm, and contact the fire department by calling 9-911. Do not fight the fire unless it is very small and you have been trained in fire fighting techniques.

4. Inform the Office of Environment Health, & Safety (EH&S) as soon as possible.

5. During normal working hours, call the following:

| | |
|---|---|
| EH&S Office | 642-3073 |
| BNC Safety Officer | 666-3356 |
| EH&S Health & Safety Manager | 642-3073 |

After normal working hours, call 642-6760 to contact the UC Police Department who can contact the above using their emergency call list.

7. Inform ***(PI NAME)*** and the BNC safety officer as soon as possible. If there is an injury, ***(PI NAME)*** will need to submit a report of injury to the Worker's Compensation Office.

8 After the incident, do not resume use of the Electrospin system until the lab manager and EH&S has reviewed the incident and approved the resumption of research.

**Appendix B: System component manual excerpts:**

1. Mandrel Motor Controller. See VEXTA Model BLF operating specifications and manuals in Appendix.

2. Needle Motor Controller. See VEXTA Model BLF operating specifications and manuals in Appendix.

3. Syringe Pump. See Chemyx operating specification in Appendix.

4. High Voltage Power Supplies. See Gamma High Voltage Supply specifications in Appendix.

Orientalmotor

HM-5073-4

Brushless DC Motor and Driver Package

**BLF Series**

OPERATING MANUAL

(Motor) (Driver)

Thank you for purchasing an Oriental Motor product.
This Operating Manual describes product handling procedures and safety precautions.
• Please read it thoroughly to ensure safe operation.
• Always keep the manual where it is readily available.

# 7 Operation

This chapter gives an overview of operation using the digital operator.

**Note** In this operating manual, the digital operator keys are sometimes indicated in [ ] .
Example: [MODE] , [↑] , [↓] , [SET] , [STOP] , [RUN]

## 7.1 Switching the operation mode

The necessary settings to operate the motor are performed on the digital operator.
The digital operator has four operation modes that can be switched by pressing [MODE] .
Switching to a given operation mode will illuminate the corresponding LED (green).

**Note** The motor is operated in the monitor mode. It cannot be operated in any other mode.

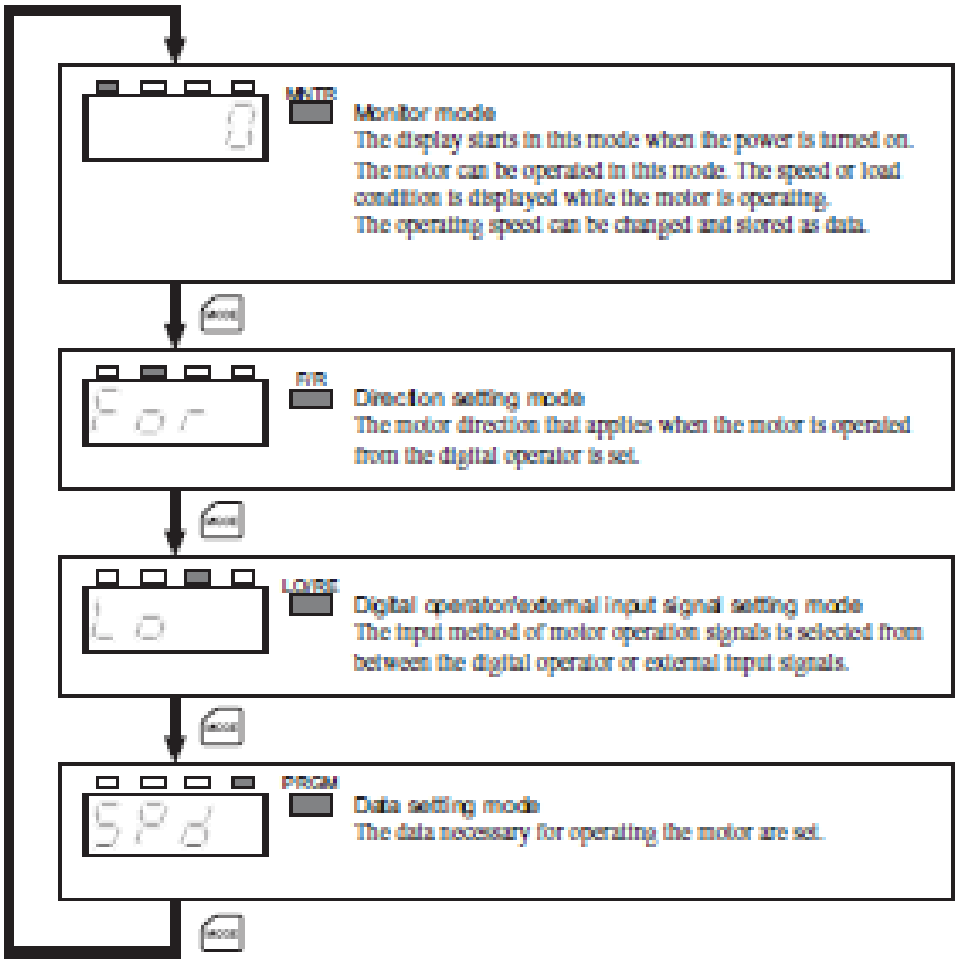

## 7.3 Operation mode transition

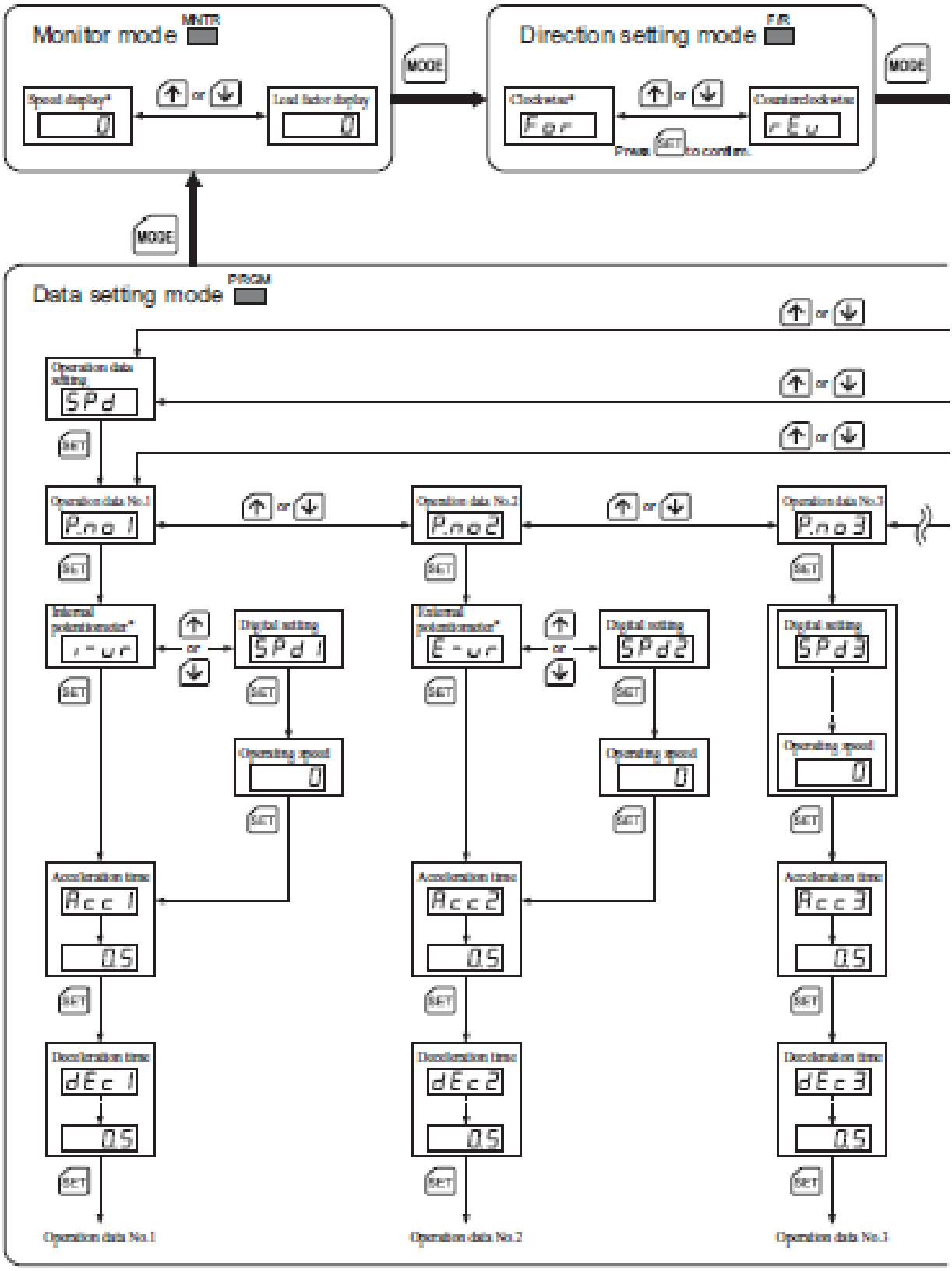


* Initial setting: 9.13 "Initializing data" (p.77)

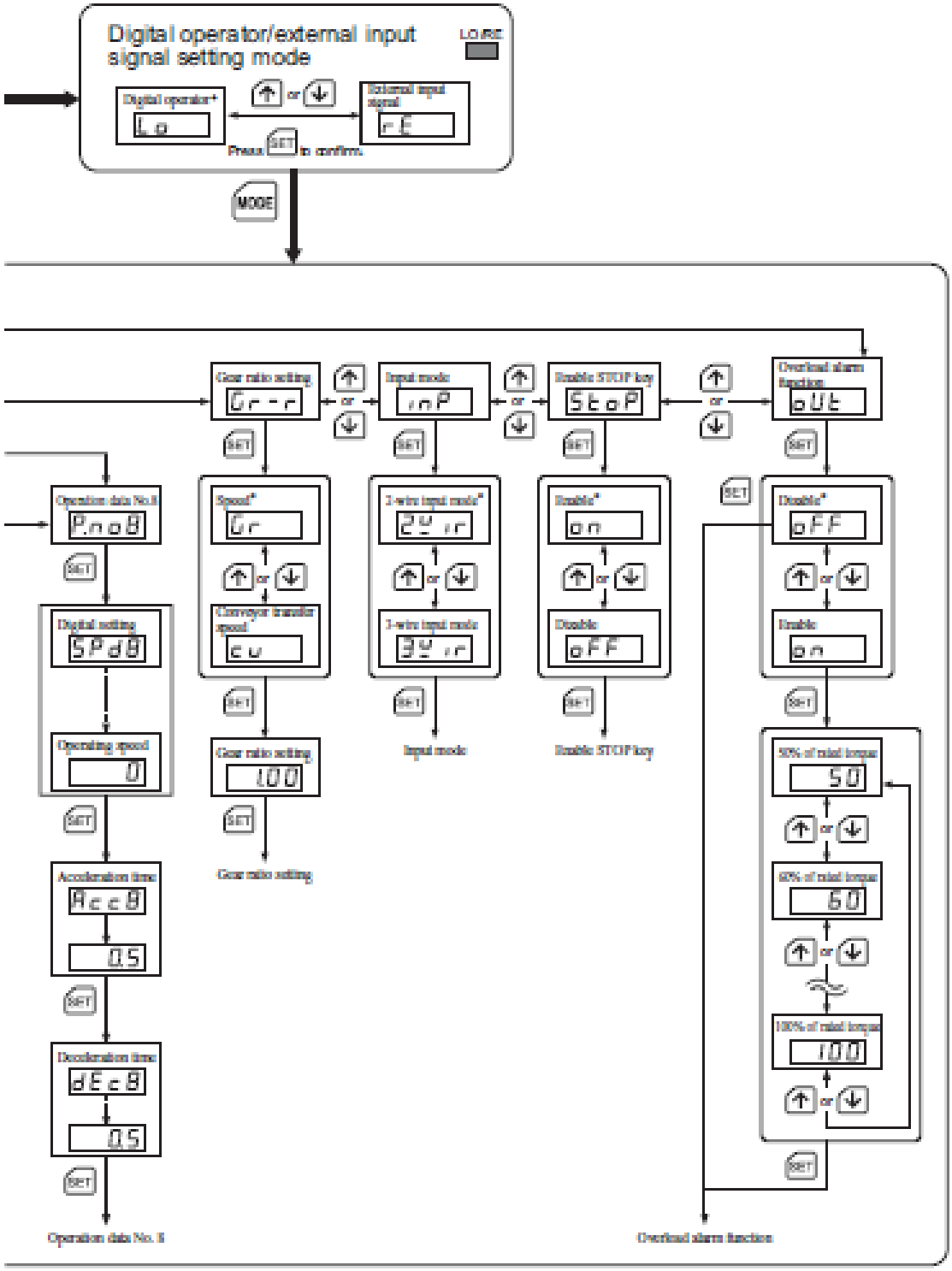
Digital operator/external input signal setting mode
LO.RE
Digital operator*
LO
or
External input signal
rE
Press SET to confirm.
MODE
Gear ratio setting
Gr-r
Input mode
inP
Enable STOP key
StoP
Overload alarm function
oUt
SET
Operation data No.8
P.no8
Digital setting
SPd8
Operating speed
0
Acceleration time
Acc8
0.5
Deceleration time
dEc8
0.5
Speed*
Gr
Conveyor transfer speed
cv
Gear ratio setting
100
2-wire input mode*
2Y.ir
3-wire input mode
3Y.ir
Input mode
Enable*
on
Disable
oFF
Enable STOP key
Disable*
oFF
Enable
on
50% of rated torque
50
60% of rated torque
60
100% of rated torque
100
Operation data No. 8
Overload alarm function

# 8 Basic operations

This chapter explains the basic operations of the motor.

## 8.1 Operation method

The **BLF** series supports four speed setting methods (① to ④) and two operation methods (a and b). Combine these methods to operate your system in an optimal manner.

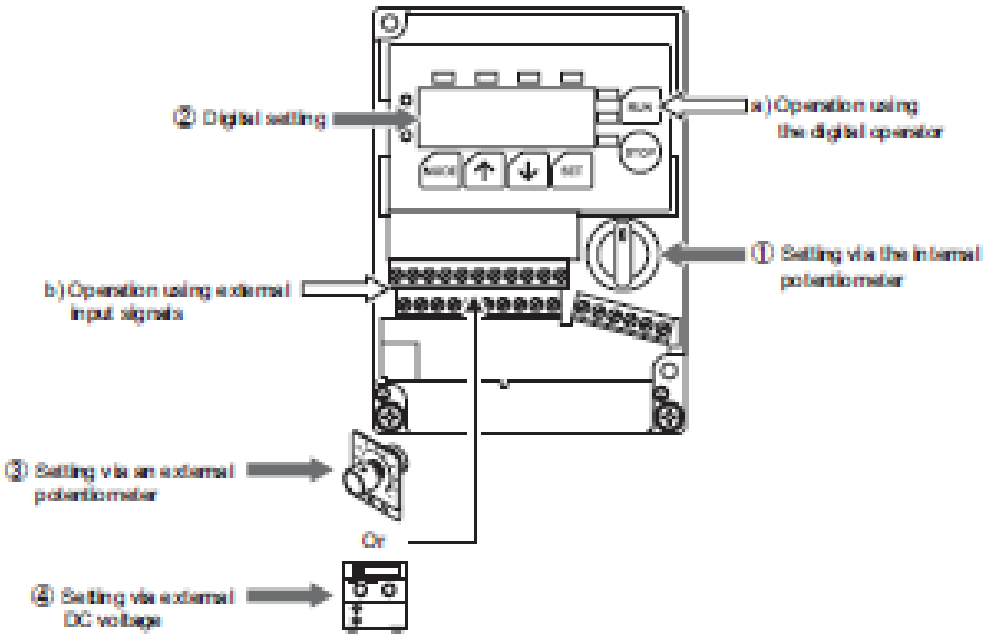


### ■ Operation method

a) Operation using RUN , STOP on the digital operator

Set the digital operator/external input signal setting mode to "digital operator."

b) Operation using external input signals

Set the digital operator/external input signal setting mode to "external input signals."

### ■ Speed setting method

①Setting via the internal potentiometer

You can set the speed easily by simply turning the internal potentiometer.

②Digital setting

You can set the speed easily on the digital operator. A desired speed can be set in increments of 1 r/min.

③Setting via an external potentiometer

You can set the speed by connecting an optional external potentiometer **PAVR-20KZ** (sold separately).

④Setting via external DC voltage

You can set the speed by connecting DC voltage.

The following operations are explained in this operating manual. For the combinations not covered by the manual (those denoted by *), refer to the pages of the corresponding speed setting method or operation method and follow the same procedures.

| Operation method \ Speed setting method | ①Internal potentiometer | ②Digital setting | ③External potentiometer | ④External DC voltage |
|---|---|---|---|---|
| a) Digital operator | p.47 | p.49 | p.52 | p.52 |
| b) External input signals | * | p.55 | * | * |

## 8.2 Initial display after power on

When the driver power is turned on, the display will power up and show the following sequence. The driver is functioning correctly when this display sequence is followed.
It takes approx. 2 seconds before the MNTR LED illuminates and "0" is displayed. During this period no key operations are accepted. Operate the keys after confirming "0."

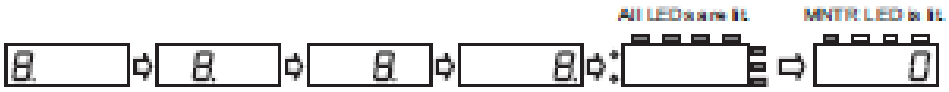


## 8.3 Speed setting via the internal potentiometer

The speed is set via the internal potentiometer and the motor is operated using the digital operator.

1. Turn on the power.
2. Set the motor direction.
   The initial setting is "For" (clock wise).
   1. Press MODE to switch to the direction setting mode.
      The F/R LED will illuminate.

      
      

   2. Press ↑ or ↓ to select a desired direction.
      For: Clockwise
      rEv: Counterclockwise

      
      

   3. Press SET to confirm the selection.
      The display will blink.

      
      

3. Set the operation method to "digital operator."
   The initial setting is "Lo" (digital operator).
   1. Press MODE to switch to the digital operator/external input signal setting mode.
      The LO/RE LED will illuminate.

      
      

   2. Press ↑ or ↓ to select "Lo" (digital operator).
      The LO/RE LED will illuminate.

      
      

   3. Press SET to confirm the selection.
      The display will blink.

      
      

## 4. Set to "Internal potentiometer" for operation data.

The initial setting is "i-vr" (internal potentiometer).

1. Press MODE to switch to the data setting mode.
   The PRGM LED will illuminate and "SPd" will be displayed.


2. Press SET .
   "P.no1" will be displayed.


3. Press SET again.
   The speed setting method will be displayed.


4. Press ↑ or ↓ to select "i-vr" (internal potentiometer).


5. Press SET to confirm.
   The display will blink and show "Acc1", after which the acceleration time will be displayed.


## 5. Set the acceleration time and deceleration time after step 4.

The initial settings are both "0.5" (0.5 second). You can set desired acceleration time and deceleration time in increments of 0.1 second in the range of 0.2 to 15 seconds.
The acceleration time and deceleration time are set based on the rated speed (3000 r/min). If a speed other than the rated speed is set, a discrepancy will occur between the displayed/specified time and the actual time. Check in 9.8 "Setting the acceleration time and deceleration time" on p.69.

1. Press ↑ or ↓ to change the acceleration time (e.g., 5.0).
   Pressing and holding the key for 3 seconds or more will increase or decrease the value successively.


2. After the acceleration time has been changed, press SET to confirm the new setting.
   The display will blink and show "dEc1", after which the deceleration time will be displayed.


3. Press ↑ or ↓ to change the deceleration time (e.g., 5.0).
   Pressing and holding the key for 3 seconds or more will increase or decrease the value successively.


4. After the deceleration time has been changed, press SET to confirm the new setting.
   The display will blink and show "P.no1."


5. Press MODE to switch to the monitor mode.

6. Operate the motor and adjust the speed.

1. Press RUN on the digital operator.
   The RUN LED will illuminate.


2. Adjust the speed using the internal potentiometer.
   Turning the internal potentiometer clockwise will start the motor and display the speed.

7. Stop the motor.
   Press STOP on the digital operator. The motor will stop in the specified deceleration time.

**Note** Once the motor stops, the output shaft will become free.

## ■ Timing chart

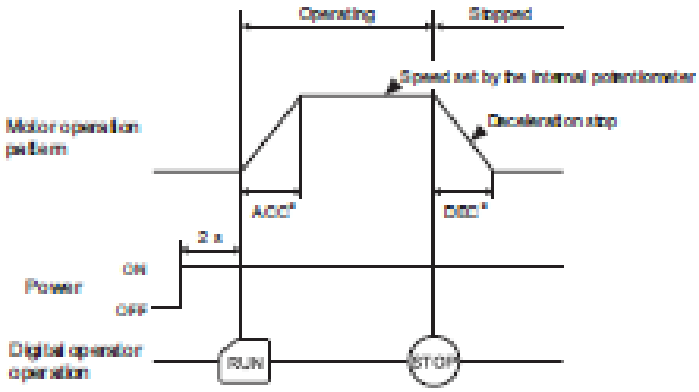


* The actual acceleration/deceleration time will vary depending on the specified speed and load condition (p.69).

## 8.4 Digital speed setting

The speed is set digitally and the motor is operated using the digital operator.

1. Turn on the power.

2. Set the motor direction.
   The initial setting is "For" (clockwise).

   1. Press MODE to switch to the direction setting mode.
      The F/R LED will illuminate.


   2. Press ↑ or ↓ to select a desired direction.
      For: Clockwise
      rEv: Counterclockwise


   3. Press SET to confirm the selection.
      The display will blink.


3. Set the operation method to "digital operator."
   The initial setting is "Lo" (digital operator).

   1. Press MODE to switch to the digital operator/external input signal setting mode.
      The LO/RE LED will illuminate.


   2. Press ↑ or ↓ to select "Lo" (digital operator).

3. Press SET to confirm the selection.
The display will blink.


## 4. Set the speed in operation data No.1

The initial setting is "0" (0 r/min).

1. Press MODE to switch to the data setting mode.
The PRGM LED will illuminate and "SPd" will be displayed.


2. Press SET .
"P.no1" (operation data No.1) will be displayed.


3. Press SET again.
The speed setting method will be displayed.


4. Press ↑ or ↓ to select "SPd1" (digital setting).

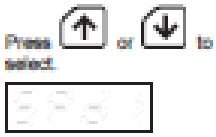


5. Press SET .
The current speed setting will be displayed.
The initial setting is "0."


6. Press ↑ or ↓ to change the speed (e.g., 2000 r/min).
Pressing and holding the key for 3 seconds or more will increase or decrease the value successively.

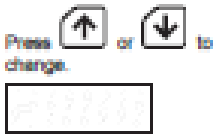


7. After the speed has been changed, press SET to confirm the new setting.
The display will blink and show "Acc1", after which the acceleration time will be displayed.


## 5. Set the acceleration time and deceleration time after step 4.

The initial settings are both "0.5" (0.5 second). You can set desired acceleration time and deceleration time in increments of 0.1 second in the range of 0.2 to 15 seconds.
The acceleration time and deceleration time are set based on the rated speed (3000 r/min). If a speed other than the rated speed is set, a discrepancy will occur between the displayed/specified time and the actual time. Check in 9.8 "Setting the acceleration time and deceleration time" on p.69.

1. Press ↑ or ↓ to change the acceleration time (e.g., 5.0).
Pressing and holding the key for 3 seconds or more will increase or decrease the value successively.

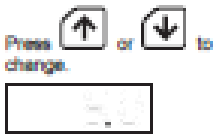


2. After the acceleration time has been changed, press SET to confirm the new setting.
The display will blink and show "dEc1", after which the deceleration time will be displayed.

3. Press ↑ or ↓ to change the deceleration time (e.g., 5.0).
   Pressing and holding the key for 3 seconds or more will increase or decrease the value successively.

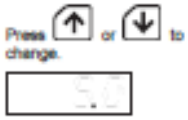


4. After the deceleration time has been changed, press SET to confirm the new setting.
   The display will blink and show "P.no1."


5. Press MODE to switch to the monitor mode.

6. Operate the motor and adjust the speed.
   Press RUN on the digital operator.
   The motor will start operating and the RUN LED will illuminate.


7. Follow the procedure below if you want to change the motor speed while the motor is running.

1. While the motor is running, press MODE with the display showing the speed (e.g., 2000 r/min).
   The MNTR LED will blink.


2. Press ↑ or ↓ to change the motor speed (e.g., 1000 r/min).
   The speed will change while ↑ or ↓ is being pressed.

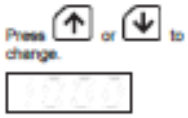


3. After the speed has been changed, press SET to confirm the new setting.
   The display will blink and the new speed will be set digitally as the speed in operation No.1.


8. Stop the motor.
   Press STOP on the digital operator. The motor will stop in the specified deceleration time.

**Note** Once the motor stops, the output shaft will become free and the load will no longer be held.

## ■ Timing chart

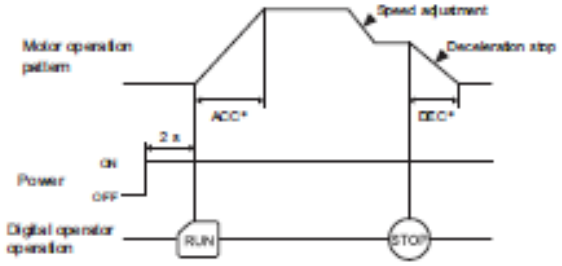


* The actual acceleration/deceleration time will vary depending on the specified speed and load condition (p.69).

## 9.6 Switching the direction

Set the motor direction that applies when the motor is operated using the digital operator.
The initial setting is "For" (clockwise).
The speed set here will become effective during operation using the digital operator. When the motor is operated using external input signals, switch the direction via external input signals.

**Note** Be sure to stop the motor before switching the direction.

1. **While the motor is stopped, press [MODE] to switch to the direction setting mode.**
   The F/R LED will illuminate.
2. **Press [↑] or [↓] to select a desired direction.**
   For: Clockwise
   rEv: Counterclockwise
3. **Press [SET] to confirm the selection.**
   The display will blink.

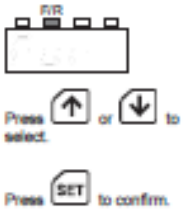


## 9.8 Setting the acceleration time and deceleration time

Set the acceleration time and deceleration time in operation data Nos.1 to 8.
The initial settings are both "0.5" (0.5 second). You can set desired acceleration time and deceleration time in increments of 0.1 second in the range of 0.2 to 15 seconds.
"Acceleration time" indicates the time required by the motor to reach the rated speed (3000 r/min) from a stopped condition.
"Deceleration time" indicates the time required by the motor to stop from the rated speed (3000 r/min).

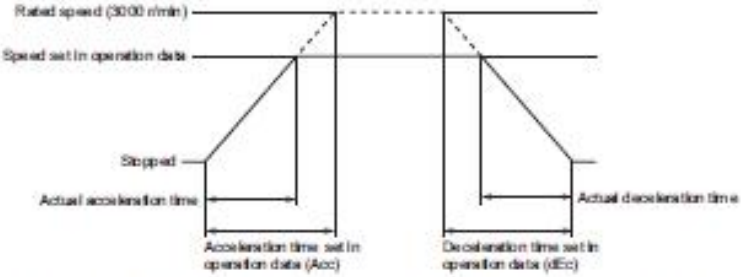


As illustrated above, the actual acceleration time is different from the acceleration time set in operation data.
The acceleration time to be set can be calculated by the following formula:

$$\text{Acceleration time set in operation data} = \frac{\text{Rated speed (3000 r/min)}}{\text{Speed set in operation data}} \times \text{Actual acceleration time}$$

For example, if you want to accelerate the motor to 2000 r/min in 2 seconds, you should set "3.0" as the acceleration time based on the following calculation:

$$\text{Acceleration time set in operation data} = \frac{3000\ \text{r/min}}{2000\ \text{r/min}} \times 2\ \text{seconds}$$

$$= 3\ \text{seconds}$$

Calculate the deceleration time in the same manner.
If the motor is started/stopped at a speed exceeding the rated speed, the actual acceleration/deceleration time will become longer than the specified acceleration time (Acc) or deceleration time (dEc).
Note that the actual acceleration time and deceleration time will vary depending on your use condition, load inertia, load torque, and so on.
In particular, the margin of error in acceleration/deceleration time will increase when the acceleration/deceleration time is set to 0.5 second or less. If smooth acceleration/deceleration cannot be achieved, increase the acceleration/deceleration time.

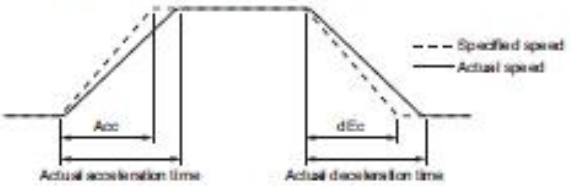

1. Press MODE to switch to the data setting mode.
The PRGM LED will illuminate and "SPd" will be displayed.


2. Press SET , and then press ↑ or ↓ to select desired operation data (e.g., P.no3).


3. Press SET .
After the digital setting (e.g., SPd3) is displayed, the current speed setting will be displayed.

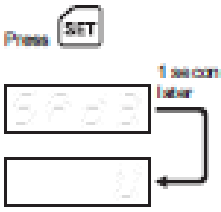


4. Press ↑ or ↓ to change the speed (e.g., 1000 r/min).
Pressing and holding the key for 3 seconds or more will increase or decrease the value successively.


5. After the speed has been changed, press SET to confirm the new setting.
The display will blink and show "Acc3", after which the acceleration time will be displayed.

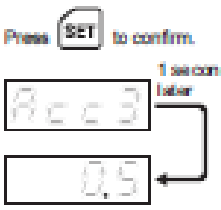


6. Press ↑ or ↓ to change the acceleration time (e.g., 5.0).
Pressing and holding the key for 3 seconds or more will increase or decrease the value successively.


7. After the acceleration time has been changed, press SET to confirm the new setting.
The display will blink and show "dEc3", after which the deceleration time will be displayed.

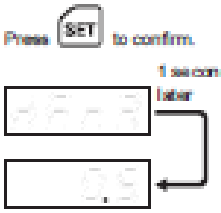


8. Press ↑ or ↓ to change the deceleration time (e.g., 5.0).
Pressing and holding the key for 3 seconds or more will increase or decrease the value successively.


9. After the deceleration time has been changed, press SET to confirm the new setting.
The display will blink.


10. Press MODE to switch to the monitor mode.

# GAMMA

## HIGH VOLTAGE LINE OPERATED POWER SOURCE

## SERIES ES

### 20 Models Covering the range of 0-5 KV to 0-100 KV 5, 10 & 20 Watt

### FEATURES:

- Low Cost
- Small Size
- Low stored energy
- Arc over & short circuit protected
- Voltage Regulated

***Standard Model***
*Single Analog Meter-*
*Reads Output Voltage*

### APPLICATIONS:

- Electrostatic Precipitators
- Electrostatic Spinning
- Electro Chemical Processes
- Insulation Testing
- Electrostatic Studies

***Optional***
*Dual Analog Meters*
*Read Output Voltage and*
*Output Current*

### MODEL GUIDE

| MODEL | OUTPUT VOLTAGE | OUTPUT CURRENT | | |
|---|---|---|---|---|
| | | 20 Watt | 10 Watt | 5 Watt |
| ES5 | 0 to 5KV | 4mA | 2mA | 1mA |
| ES10 | 0 to 10KV | 2mA | 1mA | 500uA |
| ES15 | 0 to 15KV | 1.33mA | 600uA | 333uA |
| ES20 | 0 to 20KV | 1mA | 500uA | 250uA |
| ES30 | 0 to 30KV | 660uA | 350uA | 166uA |
| ES40 | 0 to 40KV | 500uA | 250uA | 125uA |
| ES50 | 0 to 50KV | 400uA | 200uA | 100uA |
| ES60 | 0 to 60KV | 330uA | 166uA | 85uA |
| ES75 | 0 to 75KV | 266uA | 133uA | 66uA |
| ES100 | 0 to 100KV | 200uA | 100uA | 50uA |

### DESCRIPTION:

The **Gamma** "ES" series provides a portable High Voltage Source of power for scientific and industrial applications, with power levels to 20 watts and voltage levels to 100KV. The 100KV supply in this series weighs approximately 11-lbs. making it ideally suited for portable or laboratory applications.

All units are available in Positive or Negative polarity. Add P or N as suffix to Model to indicate polarity desired. Indicate desired output power by adding either -5W, -10W or -20W to the end of the complete model number. *Example model number : ES5P-10W*


**GAMMA HIGH VOLTAGE RESEARCH INC.**

***Designers/Manufacturers-High Voltage Power Supplies***

**1096 NORTH U.S. #1, ORMOND BEACH, FL 32174 * TEL. 386-677-7070, FAX 386-677-3039**

# GAMMA

# SERIES ES

## ELECTRICAL CHARACTERISTICS:

| | |
|---|---|
| **Input Voltage:** | **90-240VAC; 50-60Hz** |
| **Output Voltage:** | **Continuously adjustable from zero to maximum output rating.** |
| **Output Current:** | **See ratings of individual models** |
| **Regulation:** | **.05% for +/-10% line change.** |
| **Ripple:** | **.1%** |
| **Control:** | **Front panel mounted 10 turn potentiometer for zero to maximum output voltage.** |
| **Output Cable:** | **Up to and including 30KV - Alden Type Polyethelene<br>Above 30KV - Coaxial Type.<br>Mating Cable provided.** |
| **Size:** | **5" (H) x 8" (W) x 10" (L), wt. < 11lbs.** |
| **Standard Metering:** | **Single analog meter reads output voltage** |

**OPTIONAL FEATURES:**

1) **Output voltage monitor (VM)**
2) **Dual analog meter (DAM)**
3) **Single Digital Panel Meter (SDPM)**
4) **Dual Digital Panel Meters (DDPM)**
5) **Overload Trip (OL)**
6) **RS232C Interface (RS232C)**
7) **External Program (PRG)**

**Please note: Dual Output and Reversible versions are also available.**

**Please consult factory.**

**GAMMA HIGH VOLTAGE RESEARCH INC.**

*Designers/Manufacturers-High Voltage Power Supplies*

**1096 NORTH U.S. #1, ORMOND BEACH, FL 32174 * TEL. 386-677-7070, FAX 386-677-3039**

# Product Overview

Chemyx Fusion Series syringe pumps are designed to handle every type of high-precision dosing application. The units' flexibility with syringe types and sizes and an advanced software interface make this line of high-precision syringe pumps integrable into any operation or laboratory work flow. Thoroughly durable both inside and out, the Chemyx Fusion syringe pumps are designed to provide years of constant and reliable service.

## Principle of Operation

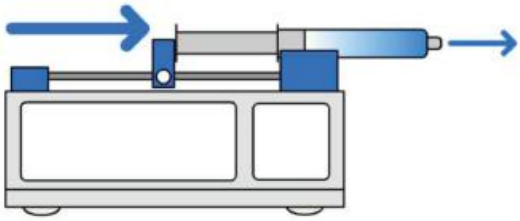

A syringe pump is a small, positive-displacement pump used to gradually transfer precise volumes of fluid. All Chemyx Fusion-series syringe pumps are driven via a stepper motor. This stepper motor precisely turns a lead screw that is threaded through a pusher block, which causes the pusher block to move. When the pump is in infusion mode, the pusher block pushes against the plunger of a secured syringe, causing the fluid to be ejected at an accurate and precise rate.

If the pump is capable of withdrawal, the plunger of the syringe is held by brackets on the pusher block. When the stepper motor turns in the opposite direction, the pusher block moves such that the syringe plunger is pulled, thus drawing fluid into the syringe.

For the Fusion Series syringe pumps, the pusher block moves to the right for infusion and to the left for withdrawal.

# Controlled Elements

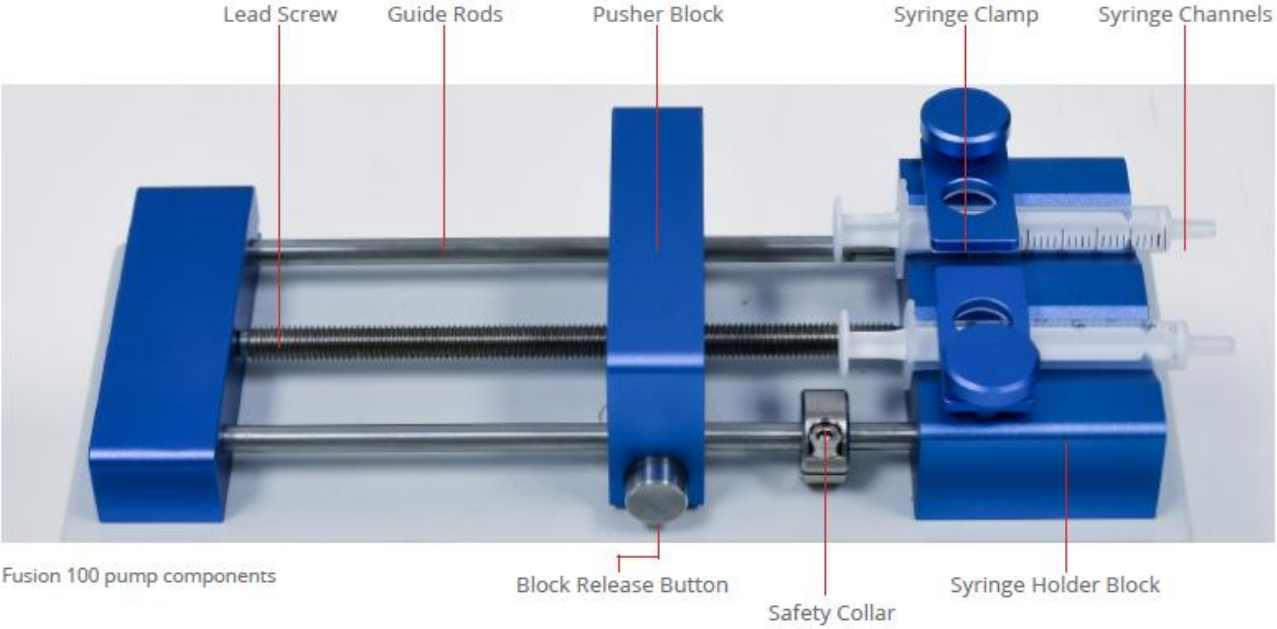


Fusion 100 pump components

All Fusion Series pumps have a single lead screw through which the pusher block is threaded. The pusher block moves when the lead screw turns. The two guide rods keep the pusher block horizontal and perfectly perpendicular to the lead screw. The block-release button disengages the pusher block from the lead screw, which allows the pusher block to be easily moved to a new position as long as the button is held. Releasing the button will lock the pusher block back in place.

Syringes are placed on the syringe-holder block in the v-shaped grooves, or channels, and held securely using syringe clamps. The Fusion 100 and 200 both have two syringe channels, while the Fusion 400 has four smaller syringe channels.

The safety collar of the Fusion 100 and 200 helps protect the integrity of syringes by keeping the pusher block from pushing on a completely depressed syringe.

## Controls

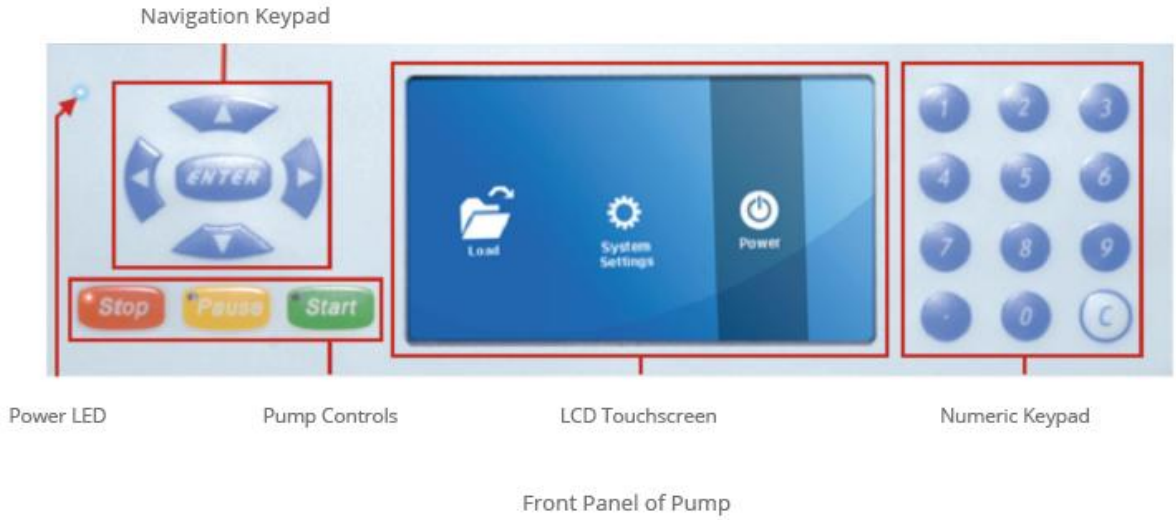


Front Panel of Pump

The Fusion Series uses a bright, 4.25", resistive, LCD touchscreen with an intuitive graphical user interface (GUI) for setting up detailed pump run methods. Buttons and entry fields within the GUI are all selectable using the touchscreen. As a resistive, LCD touchscreen, the interface can be operated with any object, not just the touch of a fingertip. Selecting elements by touch only requires a small amount of pressure; however, please do not use sharp objects as they may damage the screen.

The Fusion series also includes physical navigation controls, allowing users to manually maneuver between selectable GUI elements without touching the screen. Inputting numbers and letters within the GUI is done using the physical numeric keypad. The physical pump control keys are used to start, pause, and stop pump activity.

The power LED and pump-control LEDs allow users to easily discern whether the pump is on and whether it is currently running, paused, or stopped.

## Fusion 100


1. If necessary, move and tighten the infusion safety collar (see Adjusting the Safety Collar).
2. While pressing in the lock-release button, slide the pusher block all the way to the left.
3. Pull up on the spring-loaded syringe clamp and place the syringe in one of the channels of the syringe-holder block. Ensure that the flange of the syringe barrel is flush against the edge of the syringe-holder block. Slowly lower the syringe clamp to secure the syringe in place.


4. Press the lock-release button and slide the pusher block to the right until it is flush against the syringe plunger.

# Adjusting the Safety Nut

The Fusion series of pumps can generate a significant amount of linear force. While this is extremely useful for dispensing viscous fluids at higher flow rates, the higher linear force of the Fusion series can also potentially damage the syringes in use. One source of potential damage of a syringe may occur when the plunger of the syringe is complete depressed, and the pusher block is still pushing against the syringe. Depending on the material of the syringe (i.e., glass or plastic) and the thickness of the plunger, the pressure from the pusher block could bend, distort, or just break the syringe.

To protect against this potential problem, Fusion syringe pumps use safety collars (Fusion 100 and 200) and safety bars (Fusion 400) to physically stop the pusher block before it can completely depress the syringe plunger. When a pusher block hits the safety mechanism and can no longer move forward, the pump will stop running, emit a long beep, and enter pump-stalled mode.

## Fusion 100 and 200

Adjusting the safety collar requires the use of the hex key, conveniently stored on the back left of the pump, right above the power switch. Loosening the hex screw on the safety collar allows for the collar to be slid freely along the guide rod and then securely tightened to set the position of the safety collar. The position of the safety collar should be set slightly further from the syringe-block holder than the top of syringe plunger when fully depressed.

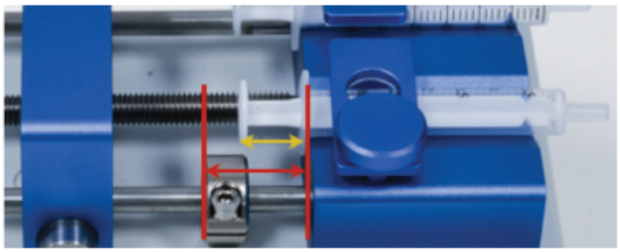

Safety collar adjsutment

**Caution:**
On the Fusion 200, during withdrawal, a syringe plunger can potentially be pulled out from the syringe, which could cause the contents of the syringe to leak out. Users should be especially aware of the length of the plunger and the point where the withdrawing pusher block will exceed that length. There are no safety collars on the Fusion 200 to prevent too much withdrawal.

# Pump Operation

## Operating Interface


The LCD screen displays a graphical user interface (GUI) from which all the pump settings and run parameters are entered. Whenever an item is currently selected, the color scheme of the element typically turns to a darker shade of the color. For example, the light blue buttons turn dark blue when selected, and the white background surrounding an unselected editable text field turns blue when the field is selected and available for editing. Also, when a GUI element is selected, the top blue bar will show the activity performed (buttons only) or show the limits to the values that may be entered for the selected field (editable fields only).

Selecting the items that will be modified can be done two ways: (1) using the LCD touch screen or (2) using the navigation keypad.

All of the elements of the GUI can be interacted with by touch. Typical touch interactions are tapping a finger on a button or text field or sliding a finger to scroll. As a resistive touch screen, these interactions are not restricted to only ungloved fingertips. Many types of objects can be used to select items on the screen with only very slight pressure, but avoid using sharp objects, as they may permanently damage the screen.

Elements of the GUI may also be selected using the navigation keypad on the front of the instrument to move between the elements.

> **Tip:**
> Users may find the navigation keypad easier to use for scrolling through items in a scrollable list, such as the list of syringes in the syringe library.

To activate (or "press") a button using the navigation keypad, select the button element such that it is highlighted and then press the **ENTER** key at the center of navigation keypad. Editable fields can immediately be edited upon selection without the need to press the **ENTER** key.

## Navigating Between Screens

All of the screens in the Fusion Series GUI exist in a hierarchy, with the Mode Selection screen at the top. Entering a new screen is performed simply by activating, or tapping, a button or icon that opens the new screen.

To return to the previous screen, tap or activate the red "X" button in the top right of the screen. This will "close" the current screen, and return to the screen that was used to enter the closed screen. This can also be accomplished by pressing the Stop key on the front of the instrument when the pump is not running.

## Entering Numbers

Most editable fields will require the user to enter numbers, which is done using the numeric keypad on the front of the instrument.

Upon first selecting an editable field, pressing any number will first clear the old value and replace it with the new value. This only applies when first selecting the field. On a field that has already been selected and edited, any further edits will just append the number to the end. In such a case, to clear the current value in the field, press the white **C** key on the numeric keypad.

Values entered in an editable field are accepted upon pressing the **ENTER** key, selecting a new element, or pressing the **Start** key. Values that exceed the limits of the editable field (shown in the blue bar at the top of the screen) are automatically corrected to be within the limits upon accepting the value.


Physical Numeric Keypad

## Entering Letters

There are some editable fields that are used to create names, such as the **Save Run Settings** screen. While there are no letters indicated on the physical numeric keypad, letters can be entered on the GUI numeric keypad or the physical numeric keypad using the lettering scheme

typically seen on phone keypads. The first press of a number key will enter the number in the field. Each subsequent quick press of the number key will cycle through the letters associated with that number. Once all the letters for that number have been cycled through, the next key press will start back over with the number again. Note that these key presses must be in rapid succession to cycle through the number and letters; any pause in key presses will cause the next key press to add a new character to the field. The clear key (C) or button acts as a delete or backspace key, which will remove the previous character.


Digital Numeric Keypad w/ Letters

# Mode Selection Screen


Mode Selection Screen 1


Mode Selection Screen 2

The **Mode Selection** screen is the top level menu for the Fusion series pumps. This screen allows users to select the Basic or Multi-Step modes, load a previously saved method, and adjust system settings or power settings.

The **Mode Selection** screen consists of two screens. Items on each screen can be tapped by touch to enter the selected option. To maneuver between the screens, the white triangular arrow on the edge of the screen can be tapped to go between the two screens. Users can also swipe a finger on the screen to switch between screens. Additionally, the navigation keypad can also be used to select an item, and the **ENTER** key is used to access the selected option.

For a description of the items listed in the **Mode Selection** screen, please refer to the associated section in this manual.

# Basic Mode


Basic Mode Screen

**Basic Mode** (or Single-Step Mode) is used for applications that do not require advanced automation, variable volume and rate settings, step looping, or ramping rates.

The **Basic Mode** screen can be reached by tapping on the Basic icon on the **Mode Selection** screen.

**Basic Mode** allows users to select the syringe being used, to set a valid volume and rate, and to choose whether to infuse or withdraw (Fusion 200 only).

The pump can only be started in **Basic Mode** while the **Basic Mode** screen is displayed.

## Syringe Selection

For every application, the first required step for setup is to select the inner diameter (ID) of the syringe(s) being used. This value is important for the syringe pump to accurately calculate the transfer rate and the total transferred volume for the liquid in the syringe. There are two approaches to entering this value: (1) enter a custom inner diameter or (2) use the built-in syringe library to import an inner diameter.

Entering a custom inner diameter (ID) is as simple as typing in the ID in millimeters in the **Syringe** editable field. The maximum and minimum values for the ID are displayed in the blue bar at the top of the screen while the **Syringe** editable field is selected. This value is also limited to only three decimal places, where any additional decimals or trailing zeroes are dropped. If the value of the Volume field is smaller/larger than the min/max volume allowed for the input inner diameter, the value in the Volume field will be adjusted to be within range. Otherwise, no changes to the volume will occur.

Tapping the **Find Syringe** button to the right of the **Syringe** editable field will open a new **Syringe Library** screen. Syringe manufacturers are found in the list on the left. Selecting a manufacturer will display all of the syringes available from that manufacturer in the list on the right. The list of syringes typically indicates the volume of the syringe first, followed by the inner diameter of the syringe. Both lists can be scrolled through by dragging a finger on the scroll bar; however, the easiest approach in this screen may be to use the navigation keypad to scroll through the lists. A list of the syringes in the library can be found in Appendix A.

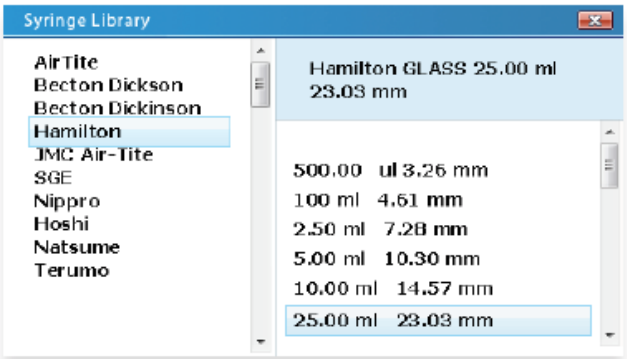


Syringe Library Screen

When a particular syringe is selected from the list on the right, an **Accept/Enter** button will appear next to the selected item. Tapping the **Accept/Enter** button (or pressing the Enter key on the navigation keypad) will import the inner diameter associated with the selected syringe and exit the **Syringe Library** screen.

Upon import of a syringe from the syringe library, the **Syringe** editable field will be updated to the new inner diameter, and the Volume editable field will be updated to the volume of the imported syringe. Please note that the volume units and values for the **Volume** and **Rate** fields may change to match the units of volume displayed for the syringe in the **Syringe Library**.

> Tip:
> Because changing the values of the syringe ID may possibly change the values and units for volume and rate, selecting a syringe or entering the syringe ID should always be the first step when setting up a run.

> Important Note:
> If more than one syringe will be used at the same time, it is recommended that the all of the syringes be of the same inner diameter. Because Fusion pumps calculate the rate that the pushing block moves based on the input syringe inner diameter and flow rate, syringes with larger or smaller inner diameters will transfer more/less volume than indicated by the GUI.

## Volume

The **Volume** field represents the total volume of liquid that the pump will transfer (infusion or withdrawal) before stopping. The amount of time that the pump will run with the set target volume can be determined by dividing the volume by the flow rate.

The value entered can be any integer or decimal within the limits for the syringe. The min/max volume limits can be found in the blue bar at the top of the screen when the Volume field is selected. Any entered value beyond these limits will be automatically adjusted to the minimum or maximum limit, whichever is closer. The total number of decimal places is limited to five.

The volume can be stated in units of mL or µL. The units used for the volume are dependent upon the set units of volume for the flow rate in the **Options** screen.

To continuously run the pump and use the entire volume of the syringe, users can set the volume to the total volume of the syringe or to the maximum limit. However, users are strongly encouraged to set the safety collar/bar (see Adjusting the Safety Collar) so that the pump does not potentially ruin the syringe.

> Important Note:
> The maximum volume limit for a syringe assumes that the length of the syringe is the length of the pump. Therefore, this maximum volume limit is almost always larger than the actual volume the syringe can hold.

## Infusion/Withdrawal (Fusion 200 only)

The Fusion 200 is capable of both infusion and withdrawal. On Fusion 200 systems, an **Infusion/Withdrawal** toggle button should appear to the right of the Volume field. The text and arrow direction on the button indicates the mode that is currently set and direction that the pusher block will move upon starting the run. Tapping the button will switch between the two modes.

## Flow Rate

The **Flow Rate** field indicates how fast the pusher block will move. The amount of time that the pump will try to run can be determined by dividing the set volume by the flow rate.

The value entered can be any integer or decimal within the limits for the syringe. The min/max flow rate limits can be found in the blue bar at the top of the screen when the **Rate** field is selected. Any entered value beyond these limits will be automatically adjusted to the minimum or maximum limit, whichever is closer. The total number of decimal places is limited to five.

The rate can be stated with four different units: mL/min, mL/hr, µL/min, and µL/hr. Adjusting the units will affect the min/max limits for the **Rate** field. The units for rate can be set in **Options**.

> **Caution:**
> Flow rate is often set for the needs of the experiment; however, users should be aware that setting high flow rates, especially for viscous fluids, may require high linear force beyond the limits of the pump which may cause the pump to stall out. Additionally, high flow rates can exert tremendous pressure within a syringe that may cause glass or plastic syringes to burst. In the case of high-pressure experiments, users should consider using Chemyx Stainless-Steel Syringes and the high-pressure Chemyx Nexus 6000 pump.

## Start-Time Delay

The **Delay** field represents the amount of time (in minutes and seconds) to delay starting the pump after pressing the **Start** button.

When entering this value with the numeric keypad, the decimal key is used to indicate the separation between minutes and seconds. The first two values entered will be minutes unless a zero is the first value or a decimal is entered, the occurrence of which causes the next values to be in seconds.

> **Example:**
> To set a delay of 1 min and 30 seconds, press the "1" key, then the decimal key, and finally the "3" and "0" keys. To set a delay of 45 seconds, press the decimal key, then the "4" and "5" keys.

To remove the delay, simply press the clear key (**C**) or set the time to zero.

# Options

The Fusion 200 is capable of both infusion and withdrawal. On Fusion 200 systems, an Infusion/Withdrawal toggle button should appear to the right of the Volume field. The text and arrow direction on the button indicates the mode that is currently set and direction that the pusher block will move upon starting the run. Tapping the button will switch between the two modes.

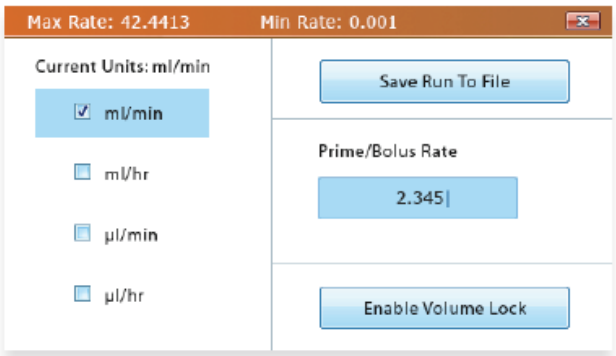


Save Run Settings screen

## Flow-Rate Units

The flow-rate units determine which units of volume and time will be used for the **Volume** and **Rate** fields. It also determines the units for the **Priming/Bolus Rate**. This setting in **Basic Mode** also changes the units for **Multi-Step Mode.**

> **Note:**
> Even if the units have changed, the values within the **Volume** and **Rate** fields will not change, which will result in significant changes in the flow rate and volume transferred. Additionally, the min/max limits for these fields will also be changed, so if the current values for volume and rate exceed the new limits, they will be adjusted to be within those set limits.

## Saving Run Parameters

All of the current settings in **Basic Mode** can be saved for future use. The name can be any combination of the alphanumeric characters, up to a max of eight characters. If a name already exists in memory, the user will be asked to overwrite the previous method. If the user enters a unique name or selects "Yes" to the overwrite question, the settings will be saved to the overwrite question, the settings will be saved to the pump, and the screen will return to the **Basic Mode** main screen. If the user selects "No" to the overwrite question, the screen will return to the **Save As** name field for the user to edit the name. The Fusion series pumps can store up to a maximum of 20 different methods.


Save Run Settings screen

Use of Hexafluoroisopropanol – Standard Operating Procedures
NanoNerve, Inc.
Created by Kyle Kurpinski
Revision: Jan. 7, 2011

**Overview**
Hexafluoroisopropanol (HFIP) is an organic solvent that can be used to solubilize polymers. Working with HFIP poses health risks as it is both toxic and highly volatile, and fumes from HFIP can be irritating to the eyes, nose, and throat. Working with HFIP can be extremely dangerous and requires proper protection from skin and inhalation exposure. Always use caution when handling HFIP and abide by the safety guidelines in this document.

**Safety Procedures**
When working with HFIP, always employ the following precautions:

a. Use only **nitrile** and/or **butyl** gloves when working with HFIP (DO NOT use standard latex gloves as they will not protect you – the solvent will penetrate them).
b. HFIP is highly volatile and must only be used within a properly operating fume hood (DO NOT open these chemicals outside the hood). The fume hood should either be connected to the building's chemical ventilation system or should have an appropriate chemical filtration system for sequestering all potentially harmful particles, such as activated carbon.
c. Use of an exhausted fume hood is preferred whenever possible for two main reasons: (1) The exhausted fume hoods in Stanley Hall are connected to a backup generator for continued operation in the event of a power outage. (2) Ductless fume hoods require scheduled replacement of the filtration system, whereas exhausted fume hoods do not. However, a ductless fume hood can be used when necessary if the following procedures are employed:
    i. The stock reagent bottle of HFIP should always be kept in an exhausted fume hood. This will minimize potential exposure to larger volumes of HFIP in the event of a power failure or ductless hood malfunction.
    ii. Prepare all working solutions in an exhausted hood.
    iii. When transferring HFIP solutions between hoods, solution must be placed in a sealed airtight shatter resistant container. Use caution when transferring HFIP.
    iv. When working with HFIP in a ductless hood, minimize the volume of the working solution. Solution volumes should be no greater than 10 mL and should be kept in individual sealable containers.
    v. Close the sash of the ductless hood completely whenever direct access to the interior of the hood is not needed. This will provide an additional safety barrier in the event of a hood failure.
d. Note: MSDS for this chemical is available if additional information is needed.

**Emergency Procedures**

HFIP has a distinct odor that may be detected if the fumes are NOT properly ventilated away from the user. In the event of a chemical spill or other emergency situation in which exposure to HFIP is possible, the following procedures should be employed:

a. If HFIP odor is detected under normal working conditions, ensure that the hood sash is in the fully closed position and immediately evacuate the area. Notify all personnel in the vicinity of the area to evacuate immediately. If possible, contain the room by closing all doors and post signs on doors to alert other personnel of potential hazard within. Contact EH&S.
b. If the ductless hood's gas detection alarm is activated, ensure that the hood sash is in the fully closed position and immediately evacuate the area. Notify all personnel in the vicinity of the area to evacuate immediately. If possible, contain the room by closing all doors and post signs on doors to alert other personnel of potential hazard within. Contact EH&S.
c. If HFIP liquid is spilled, evacuate the area immediately. Notify all personnel in the vicinity of the area to evacuate immediately and close doors behind you if possible. Contact EH&S and follow chemical spill guidelines posted in BNC.
d. In the event of a power outage or ductless hood failure while working with HFIP, ensure that the hood sash is in the fully closed position to contain any potential fumes from escaping. Ensure that any flow of HFIP solution is stopped. Evacuate the area immediately and notify all personnel in the vicinity of the area to evacuate immediately. If possible, close all doors and post signs on doors to alert others of potential hazards. Contact EH&S.